SINK SPECIFICATIONS

BLANCO STEELART™

BLANCO PRECISION™ MicroEdge™ Super Single Bowl with Ledge (1-Hole)

Model 516194

FEATURED MODEL

516194 Super Single with Ledge, 10" bowl depth

FEATURED MODEL

516201 Super Single, 10" bowl depth

FEATURES

- Required outside cabinet: 33"
- 18 gauge, 304 series stainless steel
- 18/10 chrome/nickel content
- Satin Polished Finish
- Sound deadening pads
- Rear drain placement
- Versatile design with Inset (similar to drop-in) or Flushmount installation capabilities
- Stylish drain grooves for improved functionality
- Design allows for easy install in standard 25" countertops
- Reinforced front and side rims support ledge deck
- Sink clips are installed in sink (will fit 3cm countertops)

OPTIONAL ACCESSORIES

Stainless Steel Sink Grid:	223192
Colander:	224387
Glass Cutting Board:	224390

CODE/STANDARDS COMPLIANCE

ASME 112.19.3-00
IAPMO/UPC listed

NOMINAL DIMENSIONS Model 516194 shown

OVERALL	BOWL DEPTH	DRAIN
32-1/2" x 20-1/2"	10"	3-1/2"

DXF cutout templates available on our website.

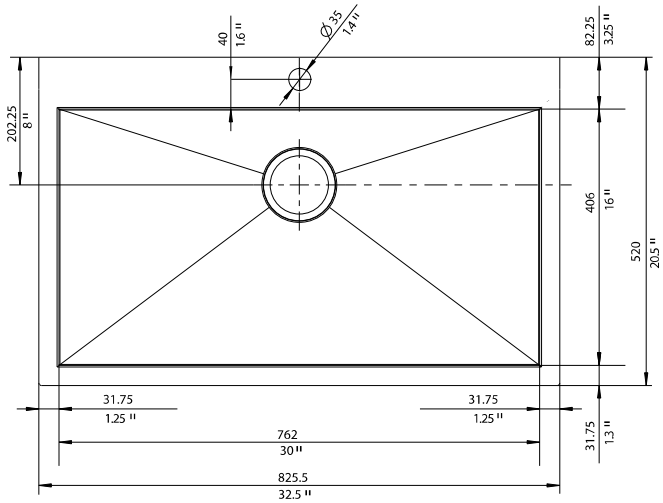

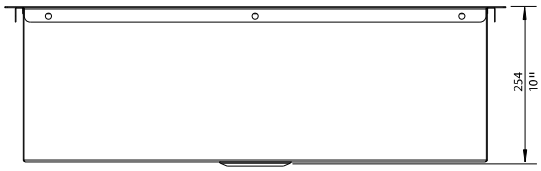

WARRANTY

Blanco America's STEELART™ sinks feature a LIMITED LIFETIME WARRANTY to be free of all manufacturing defects under normal use. See our complete warranty for details.

While Blanco America endeavors to provide accurate information, all dimensions are nominal, cannot be guaranteed, and are subject to change or cancellation. Blanco America assumes no responsibility for use of superseded or voided specifications.

JOB INFORMATION

Job Name: _____

Contact: _____

Date Specified: _____

Specifier: _____

Contractor: _____

BLANCO AMERICA
800.451.5782
www.blancoamerica.com

© 2013 BLANCO AMERICA